External work and internal work

Consider a load gradually applied to a structure. Assume a linear relationship exists between the load and the deflection. This is the same assumption used in Hooke's Law in the previous chapter, and shown by experiment to be true within the "linear elastic" range for most materials.

Then, $W = \int_0^{\Delta} F ds = \frac{1}{2} P\Delta$ $\quad \Delta =$ deflection (results in a triangular P versus Δ graph)

note: If another force besides P occurs at the location of P, further $d\Delta$ will occur <u>without</u> further increasing the magnitude of P. P remains constant, so the additional work <u>done by</u> P is P $d\Delta$ (rectangular P versus Δ graph). This is important in the derivation of the unit load method later on.

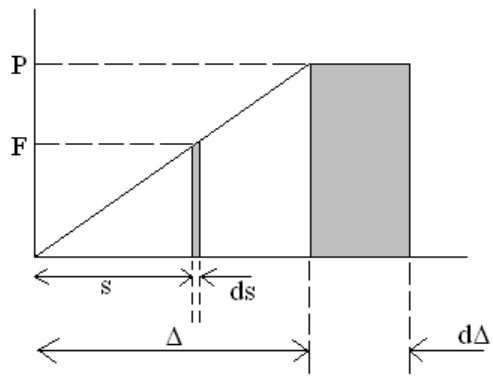

Also, $W = \frac{1}{2} C\theta$ $\quad$ where C = external couple moment

This external work is converted to internal energy (strain energy)

$dW = \frac{1}{2} M d\theta$

Using $\frac{d\theta}{ds} = \frac{M}{EI}$ $\quad$ or $\quad d\theta = \frac{Mds}{EI} \Rightarrow dW = \frac{M^2 ds}{2EI}$

So, the total strain energy in the beam of length L, is

$$W = \int_0^L \frac{M^2 dx}{2EI}$$

For a truss (axial force S only),

Strain energy $W = \frac{1}{2} S(dL) = \frac{1}{2} S(\frac{SL}{AE}) = \frac{S^2 L}{2AE}$ per member.

So, $W = \sum \frac{S^2 L}{2AE}$ for the entire truss.

Equating External and Internal Work

This concept can be used to find δ or θ at a point.

e.g.

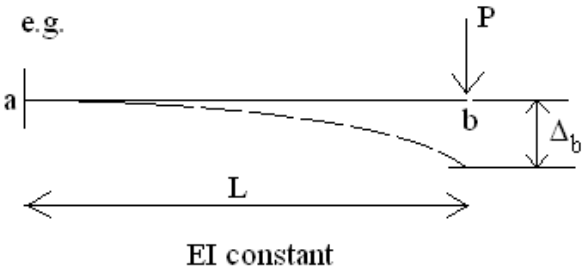

$$W_{external} = \frac{1}{2} P \Delta_b$$

$$W_{internal} = \int_0^L \frac{M^2 dx}{2EI} = \int_0^L \frac{(-Px)^2 dx}{2EI} = \frac{P^2 L^3}{6EI}$$

$$Equating \Rightarrow \Delta_b = \frac{\boldsymbol{PL^3}}{\boldsymbol{3EI}}$$

This method is quite limited in application since it is applicable only to deflection at a point of concentrated force. Also, if more than one force is applied to the system, a solution becomes impossible since there will be many deformations.

Method of virtual force (unit load method)

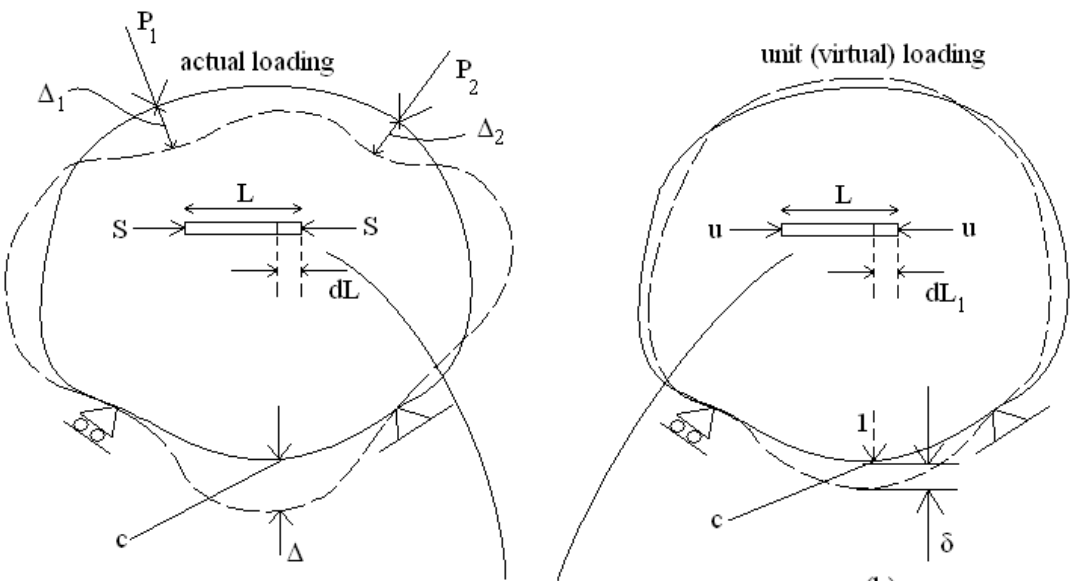

strain energies
(i.e. internal work contributes to the shortening or elongating of internal fibers, analagous to a beam with fibers shortened above the neutral axis and elongated below the neutral axis)

External work must equal the internal strain energy.

$$\frac{1}{2} P_1 \Delta_1 + \frac{1}{2} P_2 \Delta_2 = \frac{1}{2} \sum S * dL$$

$$\frac{1}{2}(1)\delta = \frac{1}{2}\sum u * dL_1$$

Compared with the previous section, this is a more useful derivation of internal strain, which applies to multiple loads, none of which are required to be at the location in which we want to find the deflection.

Now imagine that the actual loads P_1 and P_2 are gradually applied to case "b".

Equating external work and internal strain energy yields ;

$$\frac{1}{2}(1)\delta + \frac{1}{2}P_1\Delta_1 + \frac{1}{2}P_2\Delta_2 + 1*\Delta = \frac{1}{2}\sum u * dL_1 + \frac{1}{2}\sum S * dL + \sum u * dL$$

$1*\Delta$ and $\sum u * dL$ are the extra "rectangular" work values as described in the previous section.

The strain energy and work done must be the same whether the loads are applied together or separately, from conservation of energy.

$1*\Delta$ must cancel with $\sum u * dL$

i.e. $1*\Delta = \sum u * dL$ or $1*\theta = \sum u * dL$ where "1" in the second expression corresponds to an external unit couple.

note: "1"and "u" are virtual values and "Δ", "dL", and "θ" are actual values.

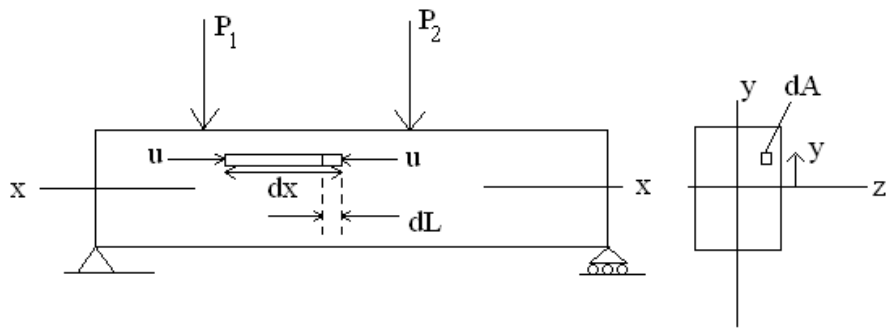

We need to find dL and u in terms of actual, measurable, quantities.

$$\frac{My}{I} = \text{stress at y}$$

$$\text{(stress)} = \text{(strain) E} = \frac{dL}{dx}(E) \text{ where dx = length of fiber}$$

$$\Rightarrow dL = \frac{(\text{stress})(dx)}{E} = \frac{Mydx}{EI} \text{ and u = force = (stress)(area)} = \frac{my}{I}dA$$

note: the upper case "M" corresponds to the moment from the "actual" values (moment resulting from P_1 and P_2 in the picture above), while the lower case "m" corresponds to the moment from the "virtual" unit force.

$$1*\Delta = \sum(\frac{my}{I}dA)(\frac{My}{EI}dx) = \int_0^L \frac{Mm}{EI^2}dx\int_A y^2 dA \quad \text{But, } \int_A y^2 dA = I$$

So,

$$\mathbf{1 * \Delta = \int_0^L \frac{Mm}{EI} dx}$$

where m = bending moment from unit load and M = bending moment from actual loads

Also,

$$\mathbf{1 * \theta = \int_0^L \frac{Mm}{EI} dx}$$

m = bending moment from unit *couple* and M = bending moment from actual loads

Now is a good time to recap some of the minor assumptions that may not have been explicitly stated so far:

Small angle approximations. These were used in the derivation bending stress formula, stress $= \frac{My}{I}$, which has been used in this section. Small angle approximations are valid for most structural engineering applications.

Neglecting of axial deformations. Nowhere in this section did we include axial stress and strain of the beam, only axial stress and strain of the "internal fibers." This will be shown in a later section to be a valid assumption.

Conservative forces. Consider a beam loaded by gravity. The beam will deform, and the forces will thus hit the beam at an angle. This curvature is ignored in our force analysis, since the difference in solutions is negligible, as long as the small angle approximation is valid. This assumption has been used in previous chapters, and will continue to be used in all later chapters as well.

Engineering strain, rather than true strain. This assumption was stated in the section on "Hooke's Law" in the previous chapter. This assumption was used in the current section since the strain of the "internal fibers" was taken to be $\frac{dL}{dx}$ rather than $\frac{dL}{(dx - dL)}$. Engineering strain will continue to be used in later chapters, since the difference in solutions is almost always negligible.

e.g. 1

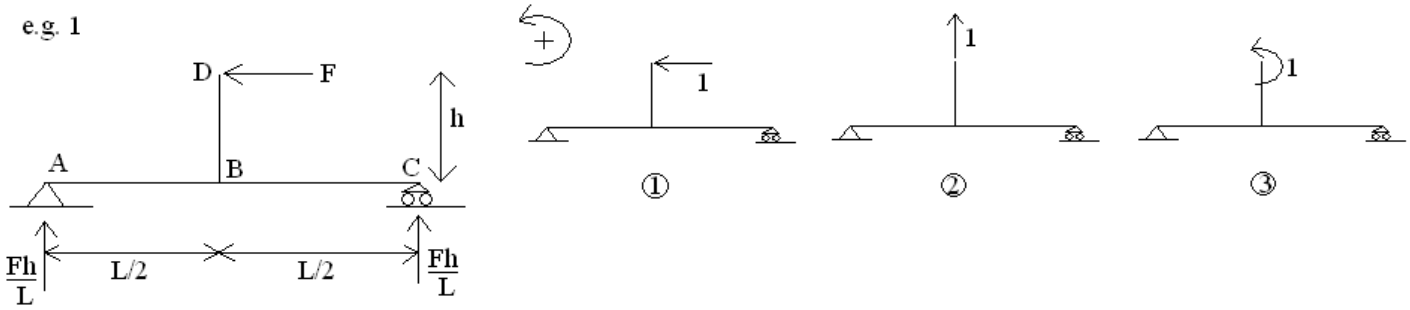

member	origin	M	m_1	m_2	m_3
BD	B	Fh - Fx	h - x	0	1
AB	A	$\frac{-Fh}{L}x$	$\frac{-h}{L}x$	$\frac{1}{2}x$	$-\frac{x}{L}$
BC	C	$\frac{Fh}{L}x$	$\frac{h}{L}x$	$\frac{1}{2}x$	$\frac{x}{L}$

$$\textit{deformation to left} = \int_0^h \frac{(Fh - Fx)(h-x)}{EI}dx + \int_0^{L/2} \frac{(\frac{-Fh}{L})x(\frac{-hx}{L})}{EI}dx + \int_0^{L/2} \frac{(\frac{Fhx}{L})(\frac{hx}{L})}{EI}dx$$

$$= \frac{1}{EI}F(.333h^3 + .08333h^2L) \quad \textit{(units of length)}$$

$$\textit{deformation upwards} = 0 + \int_0^{L/2} \frac{(\frac{-Fh}{L})x(\frac{1}{2}x)}{EI}dx + \int_0^{L/2} \frac{(\frac{Fhx}{L})(\frac{1}{2}x)}{EI}dx = 0$$

$$\textit{rotation ccw} = \int_0^h \frac{(Fh - Fx)(1)}{EI}dx + \int_0^{L/2} \frac{(\frac{-Fhx}{L})(\frac{-x}{L})}{EI}dx + \int_0^{L/2} \frac{(\frac{Fhx}{L})(\frac{x}{L})}{EI}dx$$

$$= \frac{1}{EI}F(.5h^2 + .08333hL) \quad \textit{(radians)}$$

note: signs can be tricky, which is one of the reasons why this method should be limited to beams and very simple frames.

note: It doesn't matter where we take our "origins" as long as we're consistent.

note: This problem could have been solved using $\frac{d^2\upsilon}{dx^2} = \frac{M}{EI}$ *with* $\theta_{BC} = \theta_{BA}$ *as a continuity condition.*

e.g. 2

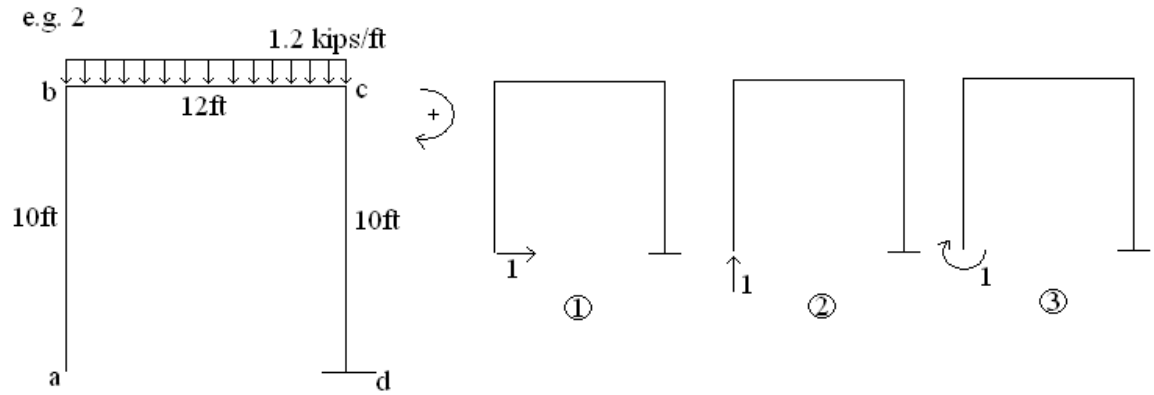

member	origin	limit	M	m_1	m_2	m_3
ab	a	0 to 10	0	-x	0	1
bc	b	0 to 12	$\frac{-1.2x^2}{2}$	-10	x	1
cd	c	0 to 10	$\frac{-1.2(12)^2}{2}$ = -86.4	x - 10	12	1

note: m_1 here not simply equal to 0 or -10 because the reactions at c look like :

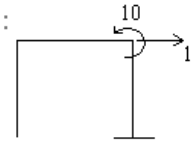

$$\Delta_1 = \int \frac{Mm_1}{EI}dx = \frac{1}{EI}[0 + \int_0^{12}(\frac{-1.2x^2}{2})(-10)dx + \int_0^{10}(-86.4)(x-10)dx]$$

$= \mathbf{7776}\ \frac{kip*\ ft^3}{EI}$ *(right) (horizontal deflection at a)*

$$\Delta_2 = \int \frac{Mm_2}{EI}dx = \frac{1}{EI}[0 + \int_0^{12}(\frac{-1.2x^2}{2})(x)dx + \int_0^{10}(-86.4)(12)dx]$$

$= \mathbf{-13478}\ \frac{kip*\ ft^3}{EI}$ *(down) (vertical deflection at a)*

$$\Delta_3 = \int \frac{Mm_3}{EI}dx = \frac{1}{EI}[0 + \int_0^{12}(\frac{-1.2x^2}{2})(1)dx + \int_0^{10}(-86.4)(1)dx$$

$= \mathbf{-1210}\ \frac{kip*\ ft^2}{EI}$ *(ccw)*

note: In this problem, as a whole, moments that deform the structure clockwise, are treated as positive. Those that deform ccw are negative. This determines the sign convention for M and m values. This is not to be confused with the sign convention for the solutions. Positive solutions $\Rightarrow$ deformation occurs in the directions assumed on the unit force diagrams.

Instead of "dL" being a non-measurable quantity associated with internal "fibers", it can be the actual change in length of a truss member.

$1 * \Delta = \sum u * dL \quad dL = \frac{SL}{AE}$ S = internal force in a given member due to actual loads

$$\Delta = \sum_{1}^{m} \frac{SuL}{AE} \text{ (truss)}$$

u = internal force in a given member due to a fictitious unit load at the point and in the direction where the deflection is sought
L = length of member
A = cross-sectional area of member
E = modulus of elasticity of member
m = total number of members

e.g.

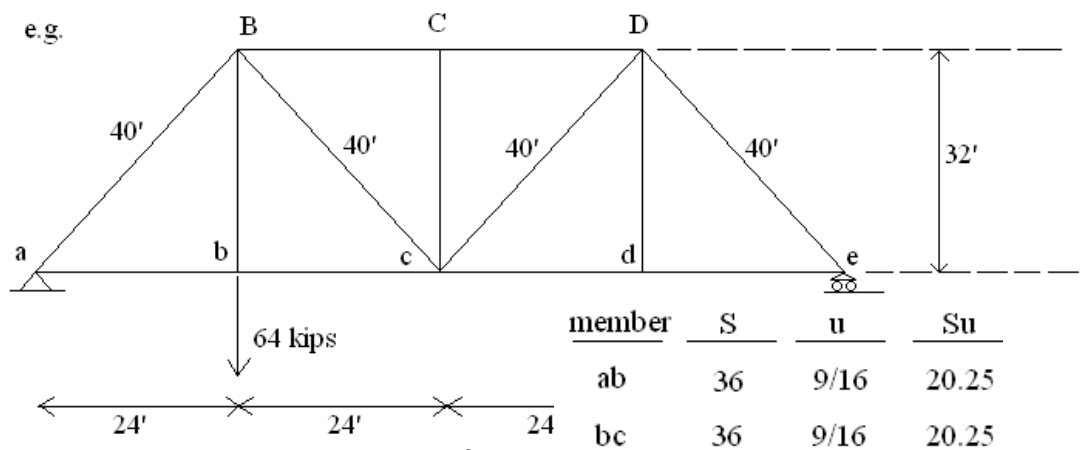

member	S	u	Su
ab	36	9/16	20.25
bc	36	9/16	20.25
cd	12	3/16	2.25
de	12	3/16	2.25
BC	-24	-3/8	9
CD	-24	-3/8	9
aB	-60	-15/16	56.25
Bb	64	1	64
Bc	-20	-5/16	6.25
Cc	0	0	0
cD	20	5/16	6.25
Dd	0	0	0
De	-20	-5/16	6.25
			$\sum$ 202.0

Not all L or all A are the same, but for simplification the ratio L/A is always the same in this example.

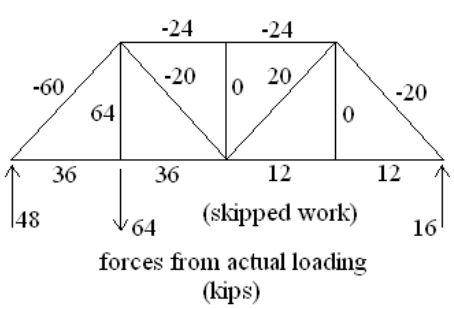

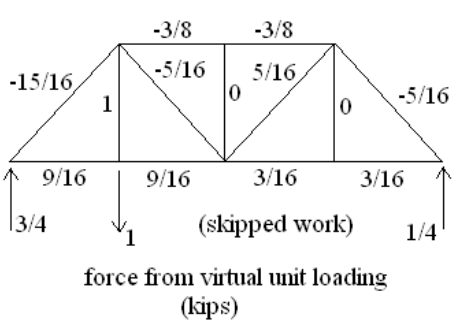

$$\Delta = \sum \frac{SuL}{AE} = \sum \frac{Su}{E}(1)$$

E is constant, so

$$\Delta = \frac{202}{30{,}000} = \mathbf{.00673\ ft\ (down)}$$

note: Finding the rotation of, for instance, member bc is equivalent to finding the relative displacement between ends b and c divided by the length bc.

Works Cited

Hsieh, Yuan-Yu, and S.T. Mau. Elementary Theory of Structures: Fourth Edition. Prentice Hall. Upper Saddle River, NJ 1995.

Trifunac, Mihailo. Lecturer. University of Southern California. CE358. Fall 2005.