Shear flow

Shear flow = $q_y = \tau * t(y)$ or $\mathbf{q_y} = \dfrac{\mathbf{VQ_y}}{\mathbf{I}}\left(\dfrac{\text{force}}{\text{dist}}\right)$ where y is the distance at which there is to be nailing or welding. Q would typically be found after a beam size has been chosen. The strength of a weld is usually specified in terms of force per unit distance, as we will see later on in the outline on steel design. So, the required weld strength = q (or $\dfrac{q}{2}$ for the picture shown below). Nail and screw strength is usually specified in units of force F. Nail spacing = s = $\dfrac{F}{q}$, where F (allowable force of the screw or nail) can be looked up for a given nail type.

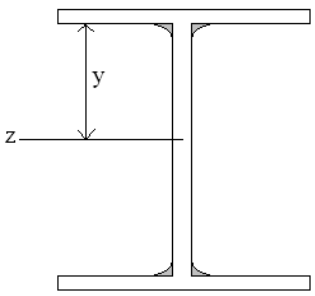

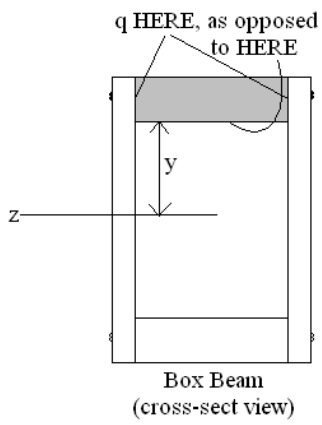

For a "Box beam", you can think of the segment

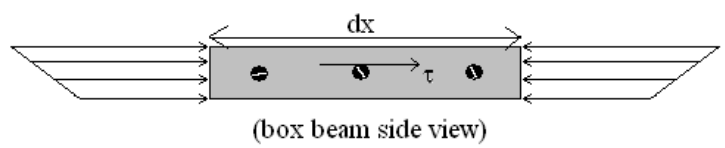

Since there is negligible σ about the x axis for a box beam, we need only consider $\sum F_x = 0$, which shows that τ shown differs from the τ we've been calculating only in that t(y) is the vertical cross-sect thickness (same Q and I (about the z axis) can be used). Since shear *flow* does not depend on thickness, there is no difference in q. Q would be integrated over the shaded region above.

e.g.
Given: Box beam shown subjected to shear force V = 10.5 kN. Allowable screw force (shear force for screw) F = 800 N.
Find: Screw spacing s.

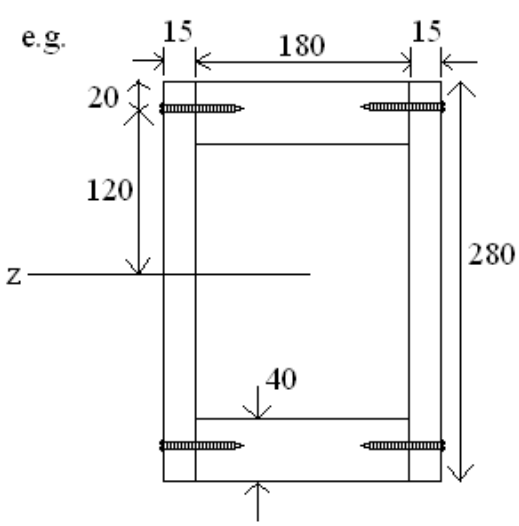

$$Q = (180)(40)(120) = 864x10^3\, mm^3$$

$$I = \frac{1}{12}(180 + 2*15)(280)^3 - \frac{1}{12}(180)(280 - 2*40)^3$$

$$= 264.2x10^6\, mm^4$$

$$q = \frac{VQ}{I} = \frac{(10.5x10^3)(864x10^3)}{(264.2x10^6)} = 34.3\, N/mm$$

$$S = \frac{2F}{q} = \frac{2(800)}{34.3} = \mathbf{46.6mm}$$