Shear

Shear deformation

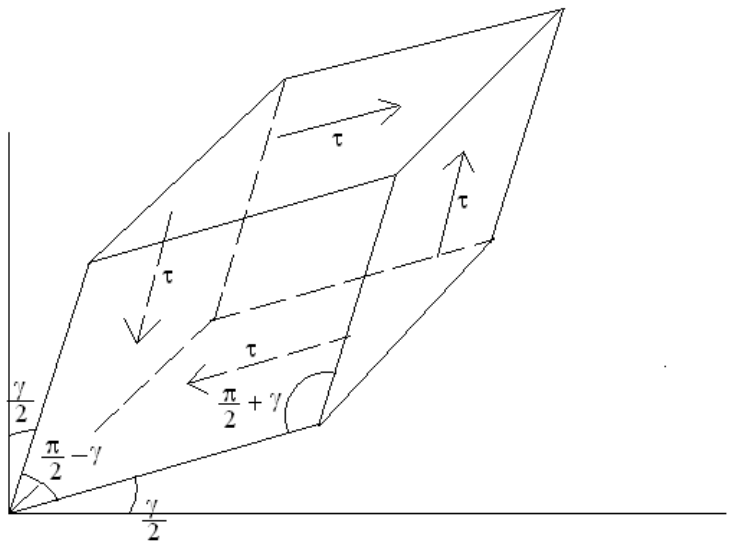

If a shear force τ acts on the upper face, each side must have an equal shear force (in the directions shown) for equilibrium.

The shear forces create a distortion as shown. γ is called the shear strain (radians).

Shear stress – strain diagrams appear similar to the axial diagram that was shown at the beginning of this chapter.

$\tau = G\gamma$
where G = Shear Modulus of Elasticity (material property)

$\gamma = \dfrac{V}{AG}$, where A = shear area

note: $G = \dfrac{E}{2(1+\nu)}$ (skipped proof)

e.g.
Given: "bearing pad" with dimensions shown, subjected to force shown.
Find: τ, γ, and d.

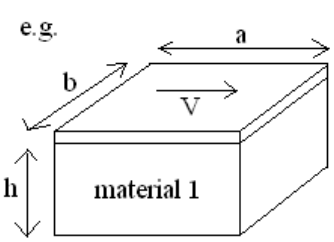

$$\tau = \frac{V}{ab} \quad \gamma = \frac{V}{abG_1} \quad d = h\tan\gamma = h\tan\left(\frac{V}{abG_1}\right)$$

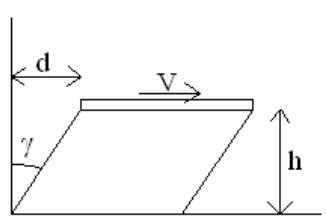

Shear stress in flexure

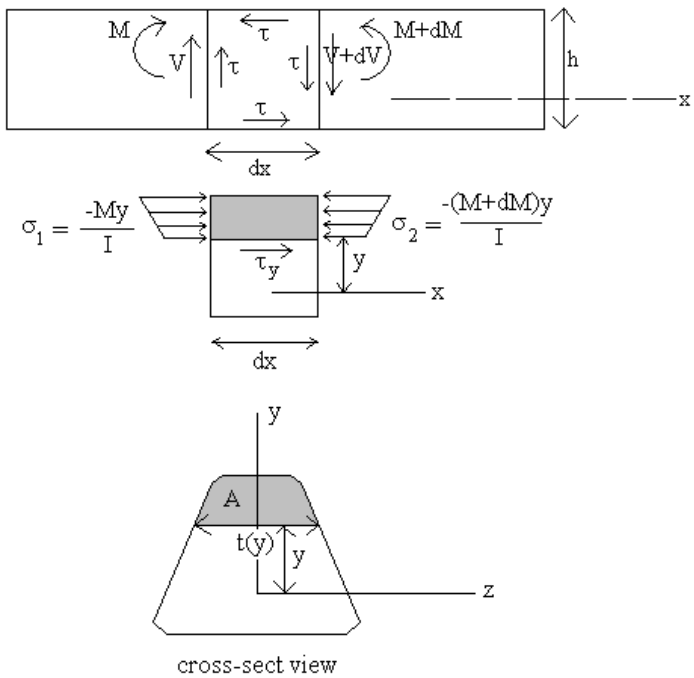

From equilibrium of shear, the shear stress in the vertical direction is matched with an equal shear stress in the horizontal direction. And, from equilibrium of force in the x direction,

$$(\tau_y)*[t(y)dx] = \int_A [\frac{(M+dM)y}{I}](dA) - \int_A [\frac{My}{I}](dA)$$

The units match, since we have:

$$(F/A)*[A] = [F/A](A) - [F/A](A)$$

The area A is the area shaded, <u>not</u> the entire cross-sectional area.

$$\tau_y = \frac{dM}{dx}\frac{1}{I*t(y)}\int_A ydA$$

$$\boldsymbol{\tau_y = \frac{VQ_y}{I*t(y)}} \text{ (General Formula)} \quad \text{where Q = "first moment" = } \int_A ydA$$

note: In pure bending, V = 0, so $\tau = 0$. Also, M + dM = M in that case, so $\tau = 0$.

For rectangular cross-sect, t(y) = b (base) and $Q_y = \frac{b}{2}(\frac{h^2}{4} - y^2)$

$$\tau_y = \frac{3V(h^2 - 4y^2)}{2bh^3} \quad \text{(rect cross-sect) (skipped work)}$$

τ_{max} occurs at y=0, which is the neutral axis.

$$\boldsymbol{\tau_{max} = \frac{3V}{2A}} \text{ (rect cross-sect) A=bh}$$

note: Although τ was calculated as being horizontal, there *must be* vertical shear that is equal, so V_{max} is determined from the SFD. Area A is always the cross-sectional area.

note: Now it is possible to optimize the bending stress for a rect sect, although designers still usually use tables.

e.g.

Given: Wood beam with rectangular cross-sect, is subjected to load shown.

$\tau_{allow} = 200\,psi, \sigma_{allow} = 1800\,psi$

Find: Optimal beam size (assume beam weight already included in load q).

e.g.

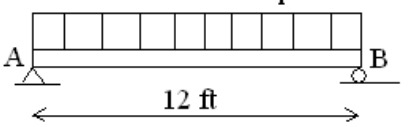

$$M_{max} = \frac{qL^2}{8} = 92{,}880\ lb*in$$

$$Supports:\quad A = B = \frac{430(12)}{2} = 2580lb = V_{max}$$

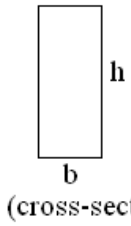

$$1800 = \sigma_{allow} = \frac{My}{I} = \frac{92880(h/2)}{(\frac{1}{12}bh^3)} = \frac{557280}{bh^2} \qquad (1)$$

$$200 = \tau_{allow} = \frac{3V}{2A} = \frac{3(2580)}{2(bh)} = \frac{3870}{bh} \qquad (2)$$

2 eq, 2 unknowns;

h=16", b=1.21" $(A_{min} = bh = 19.35in^2)$

note: h>>b, as expected.

note: (compare to e.g. 1 of the "Bending stress design examples" section) Even though an overly large allowance for the beam's own weight was provided, and very small τ_{allow}*, this beam was still about 2/3 the weight of the beam chosen in e.g. 1. Of course, this is also largely due to the limited selection of available beams in the Appendix A.*

For circular cross-sect, τ is complicated away from the neutral axis. But, we can still find τ_{max} which has been proven experimentally to be located at the neutral axis:

t(0) = d (diameter) and $Q_0 = \frac{1}{12}d^3$

$\tau_{max} = \frac{4V}{3A}$ (solid shaft) (skipped work) $A = \pi r^2$

$\tau_{max} = \frac{4V}{3A}\left(\frac{r_2^2 + r_2 r_1 + r_1^2}{r_2^2 + r_1^2}\right)$ (hollow tube) $A = \pi(r_2^2 - r_1^2)$

note: Just like a rect sect, it is now possible to optimize a tubular section, although the use of a table is more practical. Just make sure $\tau \le \tau_{max}$ after a size with appropriate section modulus has been chosen from the table.

Wide-flange cross section:

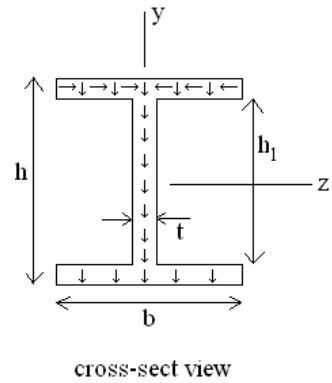

Although the *resultant* forces are located in the xy plane, there are forces distributed all over the upper flange. This creates a bending moment in the flange about the *x* axis and accompanying bending stresses and horizontal shear stresses. The web has only vertical shear stresses which can easily be determined. For the web, t(y) = t (web thickness) and $Q_y = \frac{b}{8}(h^2 - h_1^2) + \frac{t}{8}(h_1^2 - 4y^2)$,

$$I = \frac{1}{12}(bh^3 - bh_1^3 + th_1^3).$$

- see next example for Q calculation of odd shape.

$$\tau_y = \frac{3V[b(h^2 - h_1^2) + t(h_1^2 - 4y^2)]}{2t(bh^3 - bh_1^3 + th_1^3)} \text{ (wide-flange beam)}$$

(skipped work)

τ_{max} occurs at the neutral axis

$$\tau_{max} = \frac{3V(bh^2 - bh_1^2 + th_1^2)}{2t(bh^3 - bh_1^3 + th_1^3)}$$

note: a typical wide-flange beam design would be to design for σ_{allow} from a table, and then check $\tau \le \tau_{allow}$.

$\tau_{ave} = \frac{V}{th_1}$ and in this case is close to τ_{max} (within 10% plus or minus), so τ_{ave} is sometimes used in practice. We will learn methods for calculating shear, which are more often used in practice, in later chapters on concrete design and steel design.

note: τ_{ave} was also used in the design of bolted connections in chapter 1.

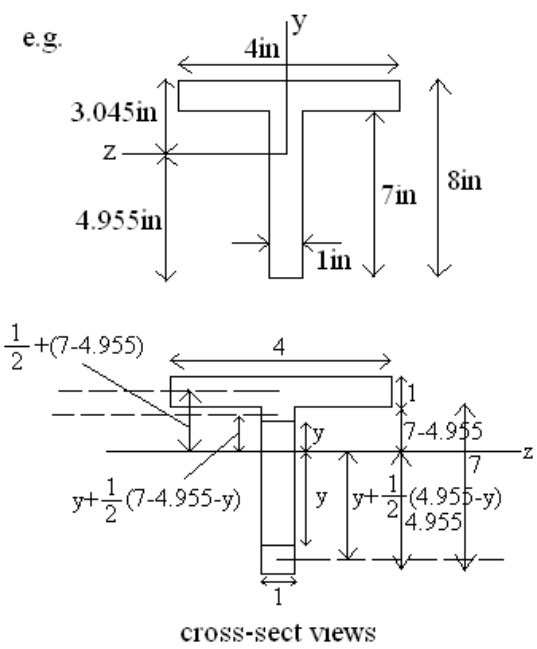

e.g.

Given: Location of neutral axis.

$I = 69.65in^4, V_{max} = 10{,}000lb$.

Find: τ_{max} *in web.*

First moment from $Q_y = \sum A_i d_i$

$A_i =$ *area a distance* $\ge y$ *away from neutral axis.*

$d_i =$ *distance from* A_i *(*A_i *neutral axis) to z.*

Choose y in web <u>*above*</u> *neutral axis:*

$$Q_y = (1x(7 - 4.955 - y)[y + \frac{1}{2}(7 - 4.955 - y)] +$$

$$(1x4)[\frac{1}{2} + (7 - 4.955)] = 12.3 - \frac{1}{2}y^2$$

where $1x(7-4.955-y)$ *is the shaded area at the top of the web, and (1x4) is the flange area.*

OR

Choose y in web <u>*below*</u> *neutral axis:*

$$Q_y = [1x(4.955-y)][y+\frac{1}{2}(4.955-y)] =$$

$$12.3-\frac{1}{2}y^2$$

as expected, where $[1x(4.955-y)]$ *is the shaded area at the bottom of the web.*

Q_{max} *occurs when y = 0. Since t(y) is constant,* τ_{max} *also occurs when y = 0 (a.k.a. the neutral axis z)*

$$\tau_{max} = \frac{VQ}{It} = \frac{10000(12.3)}{69.65(1)} = 1.8ksi$$

note: τ_{max} *occurs at the neutral axis for almost* <u>*any*</u> *cross-section.*

Gere, James M. <u>Mechanics of Materials: Sixth Edition</u>. Brooks/Cole. Belmont, CA 2004.

Lee, Vincent. Lecturer. University of Southern California. CE225. Spring 2005.

APPENDIX

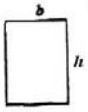

Appendix A

SECTION PROPERTIES FOR SAWN LUMBER AND TIMBER

Nominal Size $b \times h$ in.	Standard Dressed Size (S4S) $b \times h$ in.	Area of Section A in.^{2}	X-X Axis Moment of Inertia I in.^{4}	X-X Axis Section Modulus S in.^{3}	Y-Y Axis Moment of Inertia I in.^{4}	Y-Y Axis Section Modulus S in.^{3}	Board Measure per Lineal Foot	Weight in pounds per linear foot of piece when weight of wood per cubic foot equals: 25 pcf	30 pcf	35 pcf
1 × 3	¾ × 2½	1.875	0.977	0.781	0.088	0.234	¼	0.326	0.391	0.456
1 × 4	¾ × 3½	2.625	2.680	1.531	0.123	0.328	⅓	0.456	0.547	0.638
1 × 6	¾ × 5½	4.125	10.398	3.781	0.193	0.516	½	0.716	0.859	1.003
1 × 8	¾ × 7¼	5.438	23.817	6.570	0.255	0.680	⅔	0.944	1.133	1.322
1 × 10	¾ × 9¼	6.938	49.466	10.695	0.325	0.867	⅚	1.204	1.445	1.686
1 × 12	¾ × 11¼	8.438	88.989	15.820	0.396	1.055	1	1.465	1.758	2.051
2 × 3[a]	1½ × 2½	3.750	1.953	1.563	0.703	0.938	½	0.651	0.781	0.911
2 × 4[a]	1½ × 3½	5.250	5.359	3.063	0.984	1.313	⅔	0.911	1.094	1.276
2 × 6[a]	1½ × 5½	8.250	20.797	7.563	1.547	2.063	1	1.432	1.719	2.005
2 × 8[a]	1½ × 7¼	10.875	47.635	13.141	2.039	2.719	1⅓	1.888	2.266	2.643
2 × 10[a]	1½ × 9¼	13.875	98.932	21.391	2.602	3.469	1⅔	2.409	2.891	3.372
2 × 12[a]	1½ × 11¼	16.875	177.979	31.641	3.164	4.219	2	2.930	3.516	4.102
2 × 14[a]	1½ × 13¼	19.875	290.775	43.891	3.727	4.969	2⅓	3.451	4.141	4.831
3 × 4	2½ × 3½	8.750	8.932	5.104	4.557	3.646	1	1.519	1.823	2.127
3 × 6	2½ × 5½	13.750	34.661	12.604	7.161	5.729	1½	2.387	2.865	3.342
3 × 8	2½ × 7¼	18.125	79.391	21.901	9.440	7.552	2	3.147	3.776	4.405
3 × 10	2½ × 9¼	23.125	164.886	35.651	12.044	9.635	2½	4.015	4.818	5.621
3 × 12	2½ × 11¼	28.125	296.631	52.734	14.648	11.719	3	4.883	5.859	6.836
3 × 14	2½ × 13¼	33.125	484.625	73.151	17.253	13.802	3½	5.751	6.901	8.051
3 × 16	2½ × 15¼	38.125	738.870	96.901	19.857	15.885	4	6.619	7.943	9.266
4 × 4	3½ × 3½	12.250	12.505	7.146	12.505	7.146	1⅓	2.127	2.552	2.977
4 × 6	3½ × 5½	19.250	48.526	17.646	19.651	11.229	2	3.342	4.010	4.679
4 × 8	3½ × 7¼	25.375	111.148	30.661	25.904	14.802	2⅔	4.405	5.286	6.168
4 × 10	3½ × 9¼	32.375	230.840	49.911	33.049	18.885	3⅓	5.621	6.745	7.869
4 × 12	3½ × 11¼	39.375	415.283	73.828	40.195	22.969	4	6.836	8.203	9.570
4 × 14	3½ × 13¼	46.375	678.475	102.411	47.340	27.052	4⅔	8.047	9.657	11.266
4 × 16	3½ × 15¼	53.375	1,034.418	135.661	54.487	31.135	5⅓	9.267	11.121	12.975
6 × 6	5½ × 5½	30.250	76.255	27.729	76.255	27.729	3	5.252	6.302	7.352
6 × 8	5½ × 7½	41.250	193.359	51.563	103.984	37.813	4	7.161	8.594	10.026
6 × 10	5½ × 9½	52.250	392.963	82.729	131.714	47.896	5	9.071	10.885	12.700
6 × 12	5½ × 11½	63.250	697.068	121.229	159.443	57.979	6	10.981	13.177	15.373
6 × 14	5½ × 13½	74.250	1,127.672	167.063	187.172	68.063	7	12.891	15.469	18.047
6 × 16	5½ × 15½	85.250	1,706.776	220.229	214.901	78.146	8	14.800	17.760	20.720
6 × 18	5½ × 17½	96.250	2,456.380	280.729	242.630	88.229	9	16.710	20.052	23.394
6 × 20	5½ × 19½	107.250	3,398.484	348.563	270.359	98.313	10	18.620	22.344	26.068
6 × 22	5½ × 21½	118.250	4,555.086	423.729	298.088	108.396	11	20.530	24.635	28.741
6 × 24	5½ × 23½	129.250	5,948.191	506.229	325.818	118.479	12	22.439	26.927	31.415
8 × 8	7½ × 7½	56.250	263.672	70.313	263.672	70.313	5⅓	9.766	11.719	13.672
8 × 10	7½ × 9½	71.250	535.859	112.813	333.984	89.063	6⅔	12.370	14.844	17.318
8 × 12	7½ × 11½	86.250	950.547	165.313	404.297	107.813	8	14.974	17.969	20.964
8 × 14	7½ × 13½	101.250	1,537.734	227.813	474.609	126.563	9⅓	17.578	21.094	24.609
8 × 16	7½ × 15½	116.250	2,327.422	300.313	544.922	143.313	10⅔	20.182	24.219	28.255
8 × 18	7½ × 17½	131.250	3,349.609	382.813	615.234	164.063	12	22.786	27.344	31.901
8 × 20	7½ × 19½	146.250	4,634.297	475.313	684.547	182.813	13⅓	25.391	30.469	35.547
8 × 22	7½ × 21½	161.250	6,211.484	577.813	755.859	201.563	14⅔	27.995	33.594	39.193
8 × 24	7½ × 23½	176.250	8,111.172	690.313	826.172	220.313	16	30.599	36.719	42.839
10 × 10	9½ × 9½	90.250	678.755	142.896	678.755	142.896	8⅓	15.668	18.802	21.936
10 × 12	9½ × 11½	109.250	1,204.026	209.396	821.651	172.979	10	18.967	22.760	26.554
10 × 14	9½ × 13½	128.250	1,947.797	288.563	964.547	203.063	11⅔	22.266	26.719	31.172
10 × 16	9½ × 15½	147.250	2,948.068	380.396	1,107.443	233.146	13⅓	25.564	30.677	35.790
10 × 18	9½ × 17½	166.250	4,242.836	484.896	1,250.338	263.229	15	28.863	34.635	40.408